CORROSION RESISTANT LUMINAIRE RATED TO IP65

INSTALLATION INSTRUCTIONS

1. This luminaire consists of three parts. These are:

   Housing

   Gear tray

   Diffuser

2. The gear tray is removed by squeezing together each plastic clip until the gear tray can lift off. Place carefully to one side.
3. Fix the body to the mounting surface ensure adequate support is provided to the back of the fixing surface if required. When suspending the fitting use all hanging points provided on the body.
4. Cable entry may be made from either end of the body and a standard cable gland should be fitted into the 21mm hole provided where entry is required. Where cable entry is not required a blanking plug should be fitted into any unused holes.
5. There are punched holes (obrounds) on the return fold of the gear tray, these holes are to enable the tray to be hung from the gear tray clips (refer to pictures). This allows both hands to be free for easy of mains wiring to the terminal block.

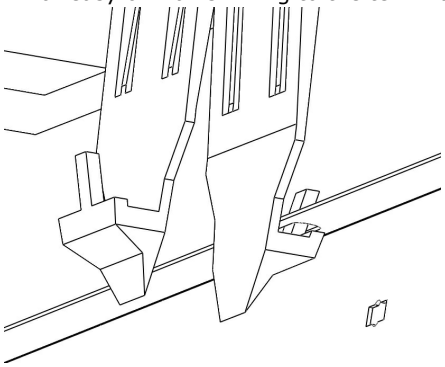

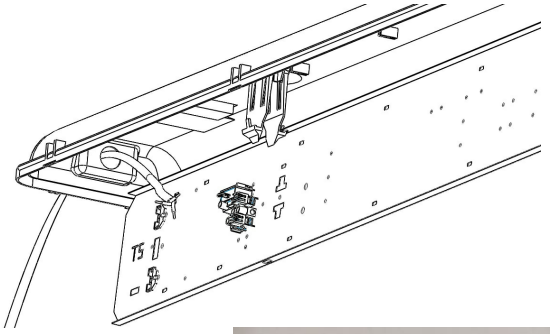

6. Connect the mains supply as indicated on the terminal block.
   Note:If through wiring, cable must be protected by high temperature sleeving.
7. Test for operation.
8. Attach diffuser, ensuring that it is seated on the gasket all the way round and fasten with the clips (supplied) which fix into housing. Ensure that the four screws provided are used on the four end clips, as shown in the photo opposite.

NOTES:

a) Full IP ratings only apply when luminaire is mounted horizontally facing downward on a ceiling internally or under a canopy externally.
b) It is the responsibility of the installer to ensure the IP ratings are maintained during installation of the fitting.
c) This luminaire is only suitable for domestic, light industrial and industrial environments which are within the scope of EN 55015.
d) Not for use in hazardous areas, areas of excessive heat or where airborne fatty substances may be present.
e) There are no serviceable parts. No lamp changes are required with LED products.
F) Operating temperature = -20ºC to 25ºC (emergency is 0ºC to 25ºC). If the temperature exceeds the drivers maximum TA there is a safety mechanism where the driver will either dim or switch off to allow it to cool.

IF THE FITTING IS DIMMABLE wire as below:

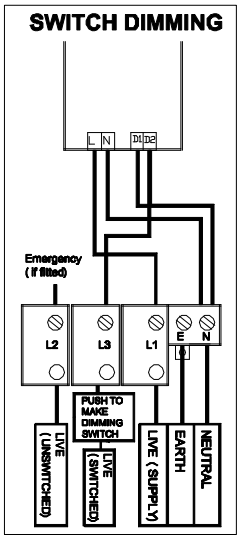

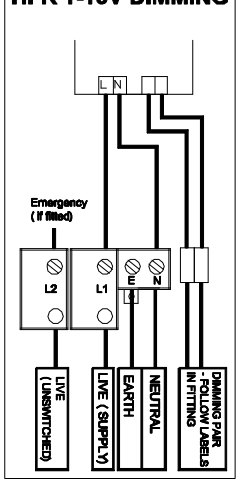

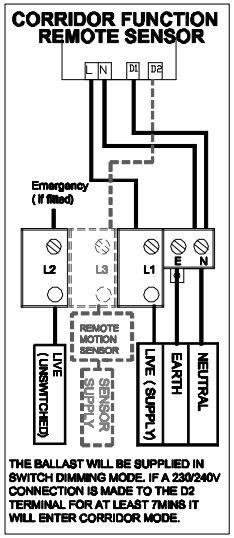

DIMMING NOTES:

The use of Corridor Function is not recommended in ambient temperatures below 0°c.
Always wire the fitting as per the labels indicated on the terminal blocks.
To ensure optimum lamp performance we advise that it is good practice to burn the lamps for 100hrs before dimming.
For mains wiring of fittings with integral sensors refer to separate sensor installation leaflet.

DOUBLE SWITCHED / NIGHT LIGHT:

For double switched or night light fittings the neutral is linked within the luminaire using blue cable. If separate neutrals are required the BLUE link cable should be removed.

IF THE FITTING IS MAINTAINED EMERGENCY:

IMPORTANT: When the mains supply is isolated, the output terminals can still be live if the battery is connected. Both mains and batteries must be isolated before servicing.

1. This luminaire is supplied converted for 3 hour maintained emergency operation.
2. Fitting should be installed in the usual way as detailed on the installation instruction leaflet supplied.
3. A secondary unswitched live connection (L2) should be fed to the inline within the fitting to supply a monitor live and for the battery charging circuit. The unswitched supply must be taken from the same phase as the switched luminaire supply.
4. Once installed the unit integral/remote must be commissioned. The battery cells must be connected to the emergency module (left disconnected in packing to avoid possible high voltages at lamp holders) this is done by a plug and socket arrangement.
5. After connecting the unswitched mains supply, the green LED indicator illuminates to indicate the batteries charging. Upon disconnection of this supply the indicator will extinguish and the emergency tube will light.
6. A period of 24 hours should be allowed before a full discharge test is carried out to ensure the battery is fully charged. Several full charges and discharges may be required to ensure that the battery attains maximum capacity.
7. Batteries should be replaced once the rated duration can no longer be met. The test record card should be completed at specified intervals to indicate that the full 3 hour duration is still being obtained
8. A maintenance sheet showing testing intervals and durations is included and should be filled in by the installation engineer on completion and issued to the customers maintenance department.

NOTES:

NORMAL AND EMERGENCY SUPPLIES MUST BE CONNECTED TO THE SAME PHASE

There are no user serviceable parts in the module.
Battery electrolyte can be harmful to eyes and open wounds. Care must be taken to avoid puncturing the case and allowing electrolyte to escape. If electrolyte touches the skin, flush with water.
Do not incinerate batteries.

WARNING – THIS LUMINAIRE MUST BE EARTHED

This luminaire has been tested and is manufactured to comply with BS EN 60598 specification for general requirements and tests. It should be installed by a suitably qualified person in accordance with I.E.E. regulations and relevant legislation.